DocuSign Envelope ID: A3D193FB-B014-4E65-97FC-45E05B295FC0

5/14/99

Prepared by
VHB Engineering NC, P.C. (C-3705)
940 Main Campus Drive, Suite 500
Raleigh, NC 27606

PROJECT REFERENCE NO.	SHEET NO.
BPI-R009	UC-5

UTILITIES ENGINEER

DocuSigned by:
JOHN M. KAMPRATH
NORTH CAROLINA PROFESSIONAL SEAL 14101 ENGINEER
5/24/2023

DOCUMENT NOT CONSIDERED FINAL UNLESS ALL SIGNATURES COMPLETED

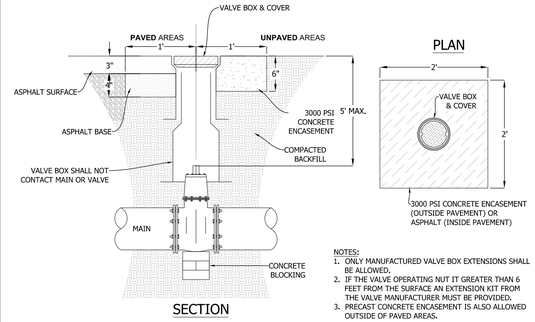

NOTES:
1. ONLY MANUFACTURED VALVE BOX EXTENSIONS SHALL BE ALLOWED.
2. IF THE VALVE OPERATING NUT IT GREATER THAN 6 FEET FROM THE SURFACE AN EXTENSION KIT FROM THE VALVE MANUFACTURER MUST BE PROVIDED.
3. PRECAST CONCRETE ENCASEMENT IS ALSO ALLOWED OUTSIDE OF PAVED AREAS.

VALVE BOX INSTALLATION

9/20/19

N.T.S. Source: VHB 0

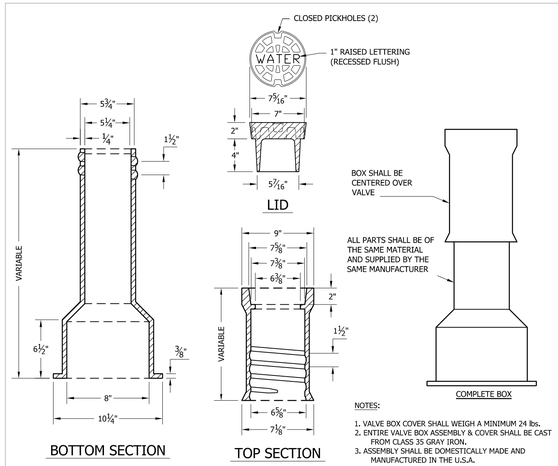

NOTES:
1. VALVE BOX COVER SHALL WEIGH A MINIMUM 24 lbs.
2. ENTIRE VALVE BOX ASSEMBLY & COVER SHALL BE CAST FROM CLASS 35 GRAY IRON.
3. ASSEMBLY SHALL BE DOMESTICALLY MADE AND MANUFACTURED IN THE U.S.A.

STANDARD WATER VALVE BOX

9/20/19

N.T.S. Source: VHB 0

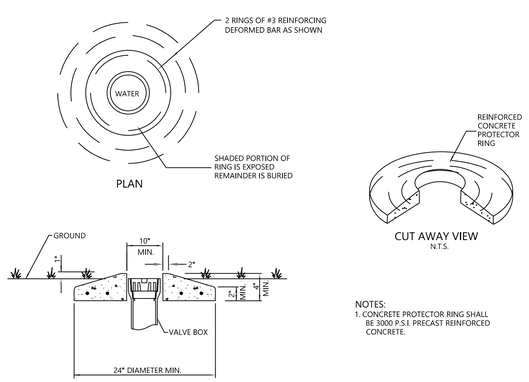

NOTES:
1. CONCRETE PROTECTOR RING SHALL BE 3000 P.S.I. PRECAST REINFORCED CONCRETE.

CONCRETE PROTECTOR RING

N.T.S. Source: VHB

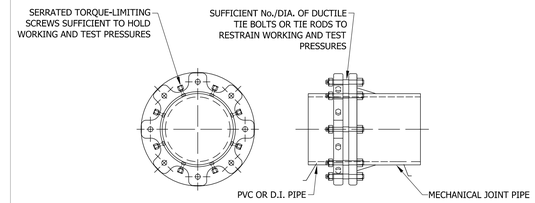

RESTRAINED JOINTS ON MECHANICAL JOINT PIPE & FITTINGS

MINIMUM FOOTAGE OF RESTRAINED PIPE FOR VARIOUS DIAMETERS & DEGREES CAST & DUCTILE IRON ELBOWS

COVER / DIA. MAIN	DEGREE OF ELBOW 11.25°	22.5°	45°	90°	VERTICAL OFFSET 45° UPPER BEND (3')	VERTICAL OFFSET 45° LOWER BEND (3')	BRANCH OF TEE	REDUCER (LARGE SIDE ONLY)
	3'	3'	3'	3'			3'	3'
6"	2'	5'	10'	25'	15'	10'	15'	20'
8"	4'	6'	14'	33'	25'	15'	30'	40'
10"	5'	8'	18'	42'	27'	18'	40'	40'
12"	5'	10'	20'	50'	30'	20'	55'	45'
16"	7'	13'	28'	67'	45'	30'	80'	45'
20"	8'	17'	35'	84'	55'	35'	105'	45'

RESTRAINED JOINT DETAIL

9/20/19

N.T.S. Source: VHB 0

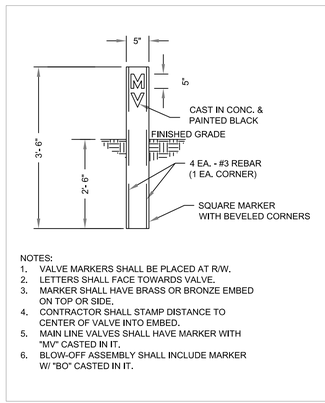

NOTES:
1. VALVE MARKERS SHALL BE PLACED AT R/W.
2. LETTERS SHALL FACE TOWARDS VALVE.
3. MARKER SHALL HAVE BRASS OR BRONZE EMBED ON TOP OR SIDE.
4. CONTRACTOR SHALL STAMP DISTANCE TO CENTER OF VALVE INTO EMBED.
5. MAIN LINE VALVES SHALL HAVE MARKER WITH "MV" CASTED IN IT.
6. BLOW-OFF ASSEMBLY SHALL INCLUDE MARKER W/ "BO" CASTED IN IT.

VALVE MARKER

N.T.S. Source: VHB

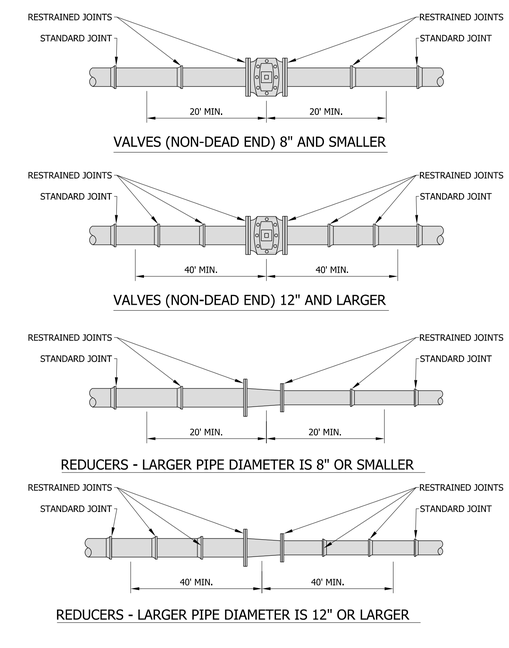

TYP. RESTRAINING FOR VALVES AND REDUCERS

9/20/19

N.T.S. Source: VHB 0

5/24/2023
J:\2018\BPI-R009_utl_details.dgn
USER:Rodrigo.L