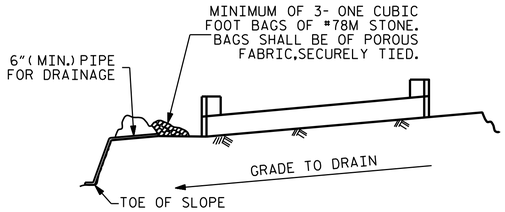


BAGGED STONE AND PIPE SHALL BE PLACED IMMEDIATELY AFTER COMPLETION OF END BENT EXCAVATION. PIPE MAY BE EITHER CONCRETE, CORRUGATED STEEL, CORRUGATED ALUMINUM ALLOY, OR CORRUGATED PLASTIC. PERFORATED PIPE WILL NOT BE ALLOWED.

BAGGED STONE SHALL REMAIN IN PLACE UNTIL THE ENGINEER DIRECTS THAT IT BE REMOVED. THE CONTRACTOR SHALL REMOVE AND DISPOSE OF SILT ACCUMULATIONS AT BAGGED STONE WHEN SO DIRECTED BY THE ENGINEER. BAGS SHALL BE REMOVED AND REPLACED WHENEVER THE ENGINEER DETERMINES THAT THEY HAVE DETERIORATED AND LOST THEIR EFFECTIVENESS.

NO SEPARATE PAYMENT WILL BE MADE FOR THIS WORK AND THE ENTIRE COST OF THIS WORK SHALL BE INCLUDED IN THE UNIT CONTRACT PRICE BID FOR THE SEVERAL PAY ITEMS.

## TEMPORARY DRAINAGE AT END BENT

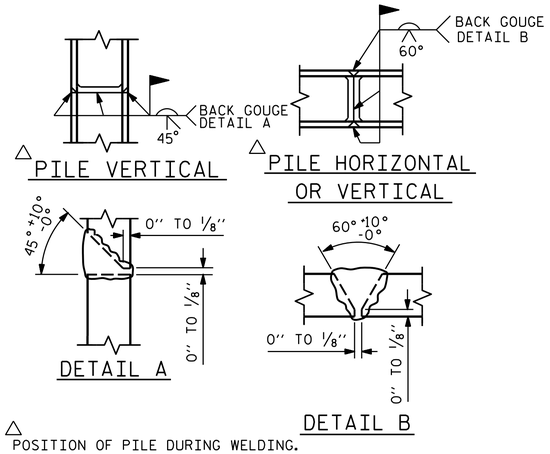


△ POSITION OF PILE DURING WELDING.

## PILE SPLICE DETAILS

### BAR TYPES

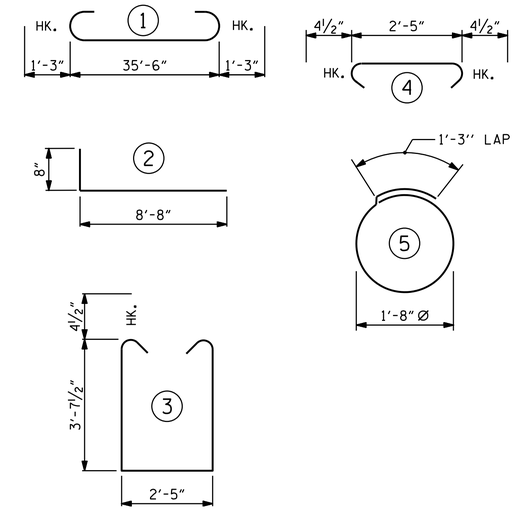


ALL BAR DIMENSIONS ARE OUT TO OUT.

### BILL OF MATERIAL
### FOR ONE END BENT

| BAR | NO. | SIZE | TYPE | LENGTH | WEIGHT |
|---|---|---|---|---|---|
| B1 | 8 | #9 | 1 | 38'-0" | 1034 |
| B2 | 28 | #4 | STR | 19'-1" | 357 |
| B3 | 9 | #4 | STR | 2'-5" | 15 |
| D1 | 20 | #6 | STR | 1'-6" | 45 |
| H1 | 40 | #4 | 2 | 9'-4" | 249 |
| K1 | 16 | #4 | STR | 2'-11" | 31 |
| S1 | 46 | #4 | 3 | 10'-5" | 320 |
| S2 | 46 | #4 | 4 | 3'-2" | 97 |
| S3 | 20 | #4 | 5 | 6'-6" | 87 |
| V1 | 52 | #4 | STR | 6'-2" | 214 |

REINFORCING STEEL (FOR ONE END BENT) 2449 LBS.

CLASS A CONCRETE BREAKDOWN (FOR ONE END BENT)

POUR #1 CAP, LOWER PART OF WINGS 17.0 C.Y.

POUR #2 UPPER PART OF WINGS 2.3 C.Y.

TOTAL CLASS A CONCRETE 19.3 C.Y.

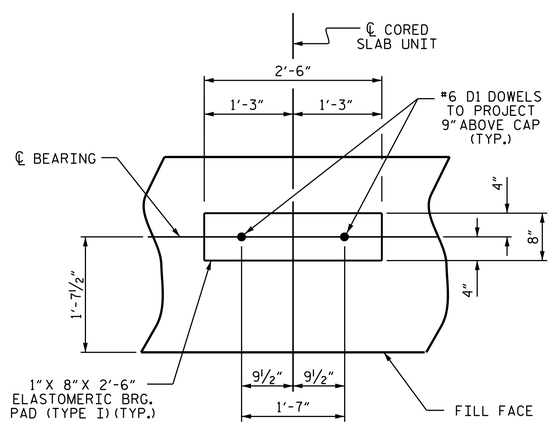


## DETAIL "A"

(END BENT No. 1 SHOWN, END BENT No. 2 SIMILAR BY ROTATION)

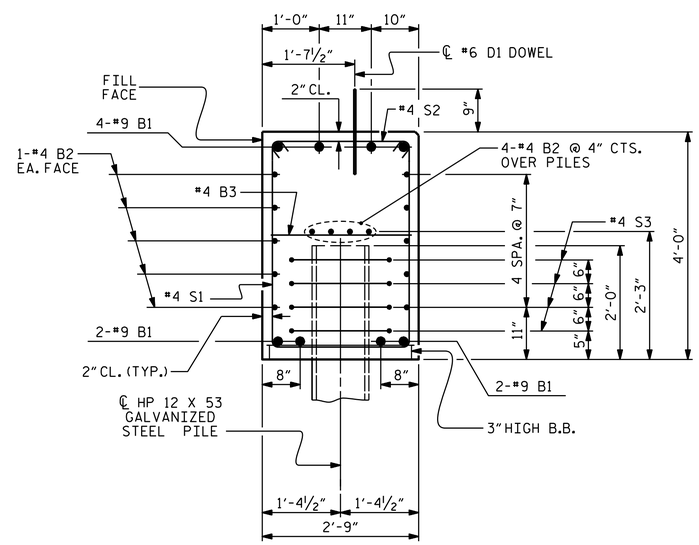


## SECTION A-A

PROJECT NO. BP1-R009

NORTHAMPTON COUNTY

STATION: 14+14.50 -L-

SHEET 4 OF 4

STATE OF NORTH CAROLINA
DEPARTMENT OF TRANSPORTATION
RALEIGH

SUBSTRUCTURE

# END BENT No. 1 & 2 DETAILS

NORTH CAROLINA PROFESSIONAL SEAL 048992 ENGINEER ELIZABETH C. PHELPS

DocuSigned by: Elizabeth Phelps A304598A0627455... 10/25/2023

DOCUMENT NOT CONSIDERED FINAL UNLESS ALL SIGNATURES COMPLETED

| REVISIONS | | | | | | SHEET NO. |
|---|---|---|---|---|---|---|
| NO. | BY: | DATE: | NO. | BY: | DATE: | S-12 |
| 1 | | | 3 | | | TOTAL SHEETS |
| 2 | | | 4 | | | 14 |

STD.NO.EB_30_90S4


VHB Engineering NC, P.C. (C-3705)
940 Main Campus Drive, Suite 500
Raleigh, NC 27606


| | | | |
|---|---|---|---|
| DRAWN BY : | D.E. MORRISSETTE | DATE : | 04/2023 |
| CHECKED BY : | E.C. PHELPS | DATE : | 04/2023 |
| DESIGN ENGINEER OF RECORD: | E.C. PHELPS | DATE : | 05/2023 |


10/25/2023
\\vhb.com\gbl\proj\Raleigh\38973.01 NCDOT_Div1_Bridge 18\NCDOT\Structures\Drawings\400_011_BP1-R009_SMU_EB04.dgn
dmorrissette


8/26/21