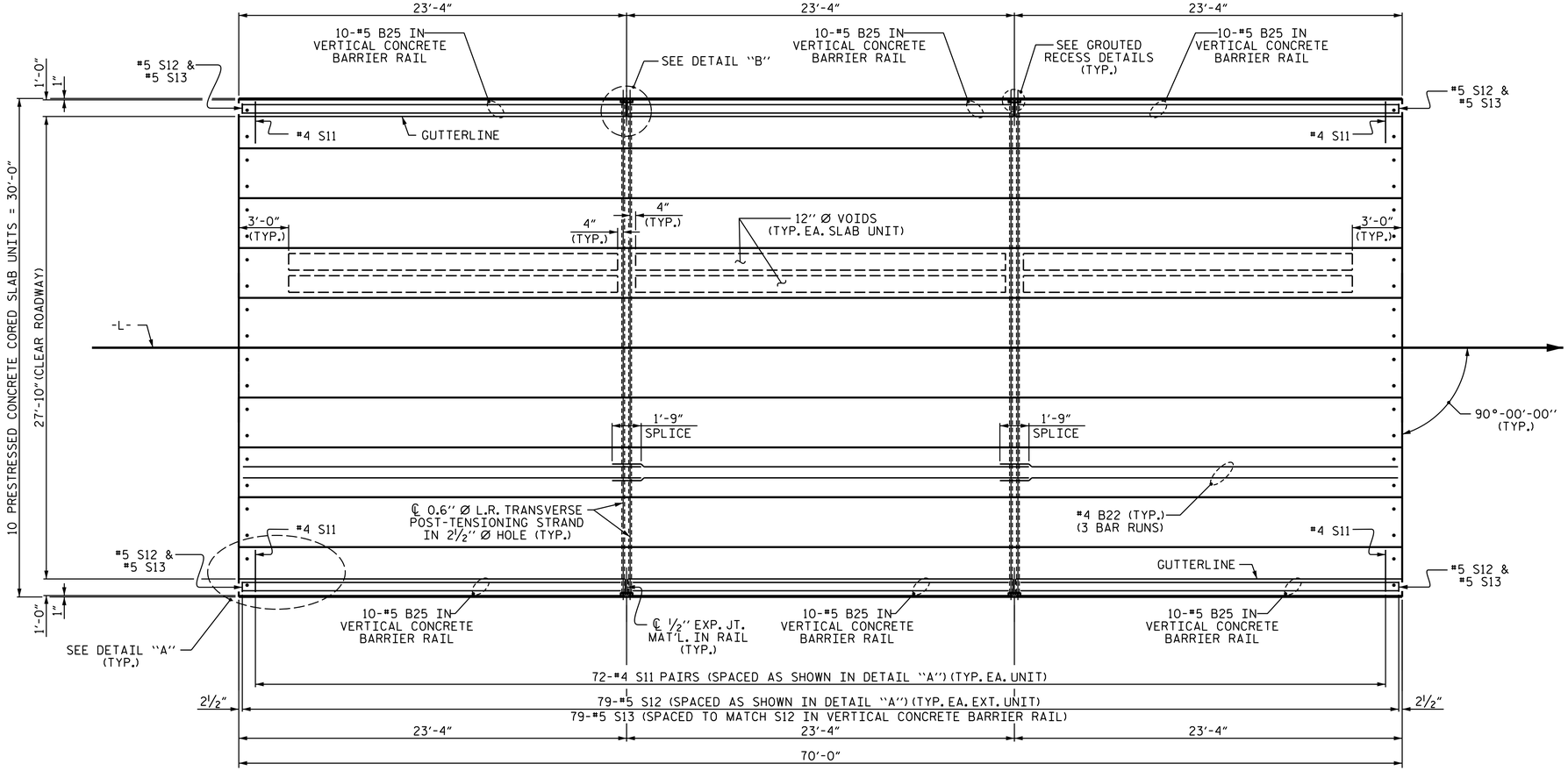

PLAN OF UNIT

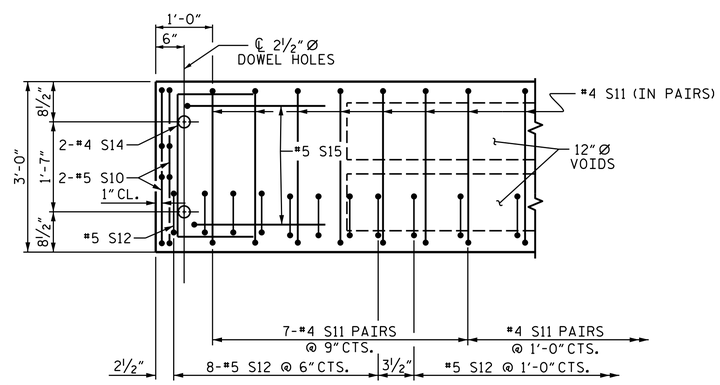

DETAIL "A"

(TYPICAL EACH END OF UNIT)
NOTE: EXTERIOR UNIT SHOWN - INTERIOR UNIT SIMILAR EXCEPT OMIT #5 S12 BARS.

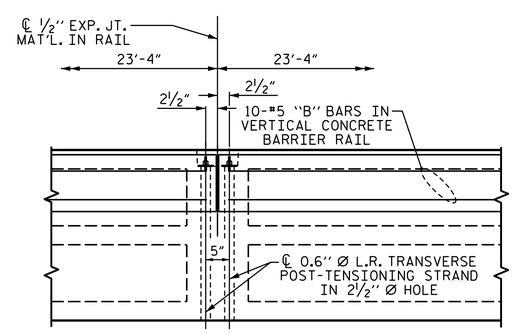

DETAIL "B"

#4 S11 BARS MAY BE SHIFTED AS NECESSARY TO MAINTAIN 1" CLEAR TO GROUTED RECESS AND 2½" Ø TRANSVERSE POST-TENSIONING STRAND HOLES

PROJECT NO. BP1-R009
NORTHAMPTON COUNTY
STATION: 14+14.50 -L-
SHEET 2 OF 3

STATE OF NORTH CAROLINA
DEPARTMENT OF TRANSPORTATION
RALEIGH
STANDARD

PLAN OF 70' UNIT 27'-10" CLEAR ROADWAY 90° SKEW

NORTH CAROLINA PROFESSIONAL SEAL 048992 ENGINEER ELIZABETH C. PHELPS
DocuSigned by: Elizabeth Phelps A30459BA0627455... 9/1/2023

REVISIONS							SHEET NO.
NO.	BY:	DATE:	NO.	BY:	DATE:		S-6
1			3				TOTAL SHEETS
2			4				14

DOCUMENT NOT CONSIDERED FINAL UNLESS ALL SIGNATURES COMPLETED

STD.NO.24PCS_30_90S_70L

vhb
VHB Engineering NC, P.C. (C-3705)
940 Main Campus Drive, Suite 500
Raleigh, NC 27606

DRAWN BY : D.E. MORRISSETTE DATE : 04/2023
CHECKED BY : E.C. PHELPS DATE : 04/2023
DESIGN ENGINEER OF RECORD: E.C. PHELPS DATE : 05/2023

9/1/2023
\\vhb.com\gbl\proj\Raleigh\38973.01 NCDOT_Div1_Bridge 18\NCDOT\Structures\Drawings\400_005_BP1-R009_SMU_PCG02.dgn
dmorrissette
8/26/21