DocuSign Envelope ID: 24B7895E-94BE-48B6-ACD1-7EF3375ED4BE

5/14/99

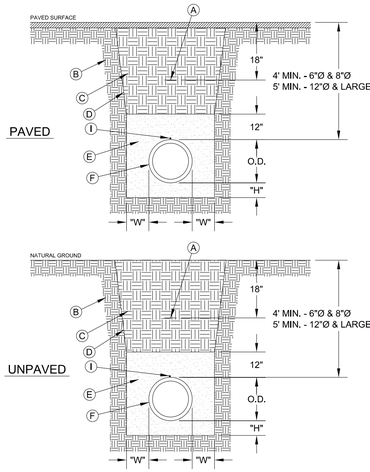

GENERAL NOTES (DRY):

1. BEDDING FOR PRESSURE AND GRAVITY PIPE IN DRY CONDITIONS.
2. PROVIDE TRENCH SAFETY SYSTEM FOR TRENCH DEPTHS GREATER THAN 5 FEET.
3. IF THE NATIVE MATERIAL EXCAVATED FROM THE TRENCH IS UNSUITABLE AS BACKFILL MATERIAL, OR THE REQUIRED COMPACTION IS UNATTAINABLE, THE CONTRACTOR SHALL, AT HIS EXPENSE, IMPORT SELECT MATERIAL TO BE MIXED WITH OR USED IN PLACE OF THE NATIVE MATERIAL. SELECT MATERIAL MUST BE APPROVED BY ENGINEER. SUBSTITUTE SOIL CEMENT SLURRY (1-SACK) IF REQUIRED IN SPECS.

CONSTRUCTION KEY NOTES (DRY):

A. APPROVED MARKING TAPE.
B. UNDISTURBED STABLE MATERIAL.
C. NATIVE MATERIAL BACKFILL.
PAVED CONDITION: COMPACT TO 90% DENSITY PER ASTM D-1557 MODIFIED PROCTOR.
UNPAVED CONDITION: COMPACT TO 85% DENSITY PER ASTM D-1557 MODIFIED PROCTOR.
(*SEE NOTE #3 IF THESE PREVIOUS CONDITIONS CANNOT BE MET.)
D. SLOPE TRENCH IN SANDY SOIL CONDITIONS.
E. USE CLASS II OR CLASS III SAND PER ASTM D-2487. NATIVE MATERIAL OR IMPORTED SELECT MATERIAL MEETING OR EXCEEDING THIS REQUIREMENT MAY BE USED. COMPACT TO 85% DENSITY PER ASTM D-1557 MODIFIED PROCTOR (OR 90% D-698 STANDARD PROCTOR).
F. APPROVED PIPE.
G. TRENCH DIMENSIONS AS FOLLOWS:

PIPE DIAMETER	"H"
6" - 30"	4"
GREATER THAN 30"	6"

PIPE DIAMETER	"W"
6" - 30"	8"
GREATER THAN 30"	12"

I. TRACER WIRE TO BE INSTALLED OVER NON-FERROUS (PVC, HDPE, ETC.) PIPES.

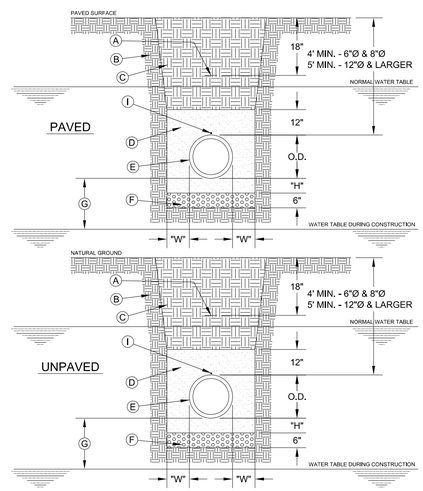

GENERAL NOTES (WET):

1. BEDDING FOR PRESSURE PIPE IN WET CONDITIONS.
2. PROVIDE TRENCH SAFETY SYSTEM FOR TRENCH DEPTHS GREATER THAN 5 FEET.
3. A DRY TRENCH MUST BE MAINTAINED WHILE PLACING BEDDING.
4. IF THE NATIVE MATERIAL EXCAVATED FROM THE TRENCH IS UNSUITABLE AS BACKFILL MATERIAL, OR THE REQUIRED COMPACTION IS UNATTAINABLE, THE CONTRACTOR SHALL, AT HIS EXPENSE, IMPORT SELECT MATERIAL TO BE MIXED WITH OR USED IN PLACE OF THE NATIVE MATERIAL. SELECT MATERIAL MUST BE APPROVED BY ENGINEER. SUBSTITUTE SOIL CEMENT SLURRY (1-SACK) IF REQUIRED IN SPECS.

CONSTRUCTION KEY NOTES (WET):

A. APPROVED MARKING TAPE.
B. UNDISTURBED STABLE MATERIAL.
C. NATIVE MATERIAL BACKFILL.
PAVED CONDITION: COMPACT TO 90% DENSITY PER ASTM D-1557 MODIFIED PROCTOR.
UNPAVED CONDITION: COMPACT TO 85% DENSITY PER ASTM D-1557 MODIFIED PROCTOR.
(*SEE NOTE #4 IF THESE PREVIOUS CONDITIONS CANNOT BE MET.)
D. USE CLASS II OR CLASS III SAND PER ASTM D-2487. NATIVE MATERIAL OR IMPORTED SELECT MATERIAL MEETING OR EXCEEDING THIS REQUIREMENT MAY BE USED. COMPACT TO 85% DENSITY PER ASTM D-1557 MODIFIED PROCTOR (OR 90% D-698 STANDARD PROCTOR).
E. APPROVED PIPE (WRAP DUCTILE IRON OR STEEL PIPE IN APPROVED POLYETHYLENE SHEETING, MINIMUM 6 MIL THICKNESS).
F. USE CLASS I GRAVEL PER ASTM D-2321 AND D-2487. NO COMPACTION REQUIRED. USE MINIMAL TAMPING, RODDING OR HAUNCH SLICING CAREFULLY IN THE EMBEDMENT ZONE. IF REQUIRED BY THE ENGINEER, TEST PER ASTM D-4254 PERCENT OF RELATIVE DENSITY.
G. 18" MINIMUM UNLESS OTHERWISE SPECIFIED.
H. TRENCH DIMENSIONS AS FOLLOWS:

PIPE DIAMETER	"H"
6" - 30"	4"
GREATER THAN 30"	6"

PIPE DIAMETER	"W"
6" - 30"	8"
GREATER THAN 30"	12"

I. TRACER WIRE TO BE INSTALLED OVER NON-FERROUS (PVC, HDPE, ETC.) PIPES.

Utility Trench

N.T.S. Source: VHB

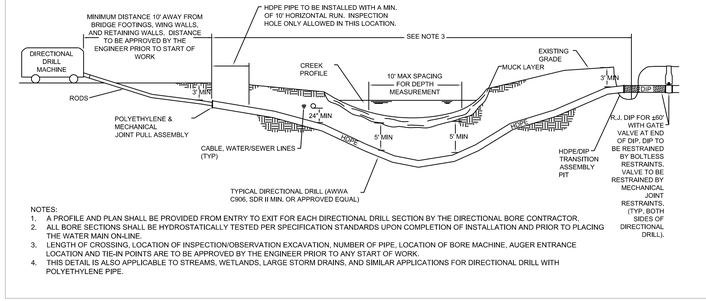

NOTES:

1. A PROFILE AND PLAN SHALL BE PROVIDED FROM ENTRY TO EXIT FOR EACH DIRECTIONAL DRILL SECTION BY THE DIRECTIONAL BORE CONTRACTOR.
2. ALL BORE SECTIONS SHALL BE HYDROSTATICALLY TESTED PER SPECIFICATION STANDARDS UPON COMPLETION OF INSTALLATION AND PRIOR TO PLACING THE WATER MAIN ON-LINE.
3. LENGTH OF CROSSING, LOCATION OF INSPECTION/OBSERVATION EXCAVATION, NUMBER OF PIPE, LOCATION OF BORE MACHINE, AUGER ENTRANCE LOCATION AND TIE-IN POINTS ARE TO BE APPROVED BY THE ENGINEER PRIOR TO ANY START OF WORK.
4. THIS DETAIL IS ALSO APPLICABLE TO STREAMS, WETLANDS, LARGE STORM DRAINS, AND SIMILAR APPLICATIONS FOR DIRECTIONAL DRILL WITH POLYETHYLENE PIPE.

Horizontal Directional Drill (HDD) HDPE

N.T.S. Source: VHB

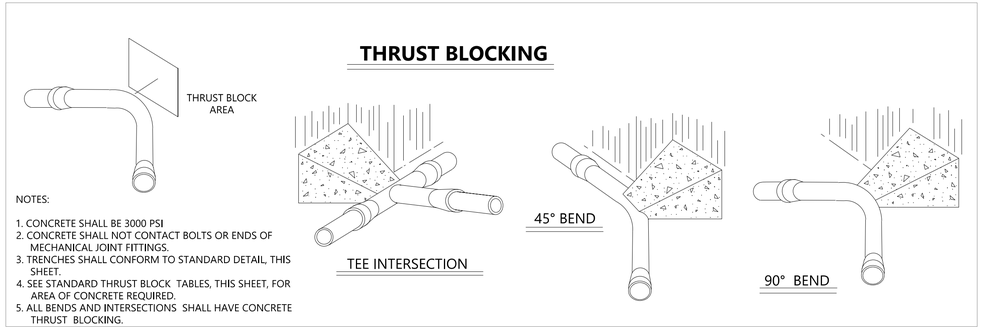

NOTES:

1. CONCRETE SHALL BE 3000 PSI
2. CONCRETE SHALL NOT CONTACT BOLTS OR ENDS OF MECHANICAL JOINT FITTINGS.
3. TRENCHES SHALL CONFORM TO STANDARD DETAIL, THIS SHEET.
4. SEE STANDARD THRUST BLOCK TABLES, THIS SHEET, FOR AREA OF CONCRETE REQUIRED.
5. ALL BENDS AND INTERSECTIONS SHALL HAVE CONCRETE THRUST BLOCKING.

Standard Thrust Block Views

N.T.S. Source: VHB

5/28/99

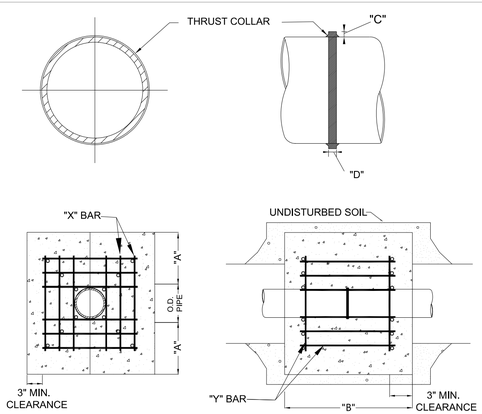

REINFORCING REQUIREMENTS						
I.D. PIPE	REBAR SIZE	"X" BAR LENGTH	"X" BAR WEIGHT	"Y" BAR LENGTH	"Y" BAR WEIGHT	NO. REQUIRED
6" - 36"	#5	2'-2" + O.D. PIPE	1.043 LBS/FT	1'-1"	1.1 LBS EACH	X-24, Y-12
36" & GREATER	#6	3'-0" + O.D. PIPE	1.502 LBS/FT	1'-3"	1.9 LBS EACH	X-24, Y-12

NOTES:

1. CONCRETE SHALL BE 3000 PSI AND TRANSIT MIXED.
2. REINFORCING BARS SHALL BE DEFORMED AND TIED TOGETHER.
3. TRENCH BOTTOM WIDTH IN VICINITY OF THRUST BLOCK INSTALLATION SHALL BE THE MINIMUM WIDTH AS SHOWN ON TRENCHING DETAIL.
4. BACKFILL TAMPED IN 6" LIFTS .
5. THRUST COLLAR MUST BE FACTORY WELDED ON BOTH SIDES ALONG BOTH EDGES OF COLLAR AROUND CIRCUMFERENCE.

THRUST COLLAR, AND THRUST SCHEDULE				
I.D. PIPE	"A"	"B"	"C"	"D"
6" - 16"	1'-4"	1'-7"	0'-2"	3/8"
20" -24"	1'-4"	1'-7"	0'-3"	1/2"
30" -36"	1'-4"	1'-7"	0'-4"	5/8"
48" & GREATER	1'-8"	1'-9"	0'-6"	7/8"

Thrust Collar Detail

5/9

N.T.S. Source: VHB

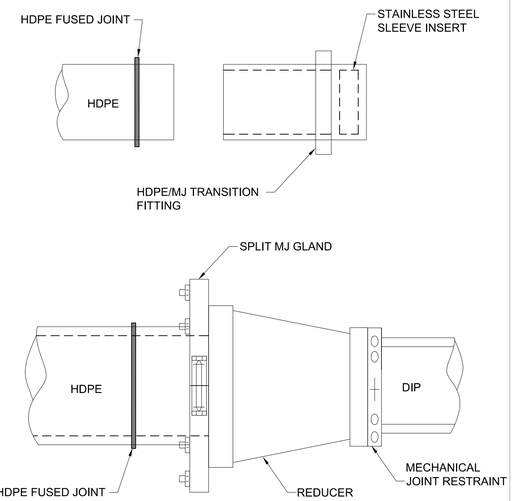

HDPE/DIP Transition Assembly

N.T.S. Source: VHB

REACTION BEARING AREAS FOR HORIZONTAL WATER PIPE BENDS BASED ON TEST PRESSURE OF 200 P.S.I. (ALL AREAS GIVEN IN SQUARE FEET.)									
SIZE AND DEGREE OF BEND	STATIC THRUST IN POUNDS	MODERATELY DRY CLAY 4000 LBS/FT²	SOFT CLAY 2000 LBS/FT²	GRAVEL, COARSE SAND 1600 LBS/FT²	8000 LBS/FT² DRY CLAY - ALWAYS DRY	SAND, COMPACT FIRM 8000 LBS/FT²	SAND, CLEAN DRY 4000 LBS/FT²	SOIL 1000 LBS/FT² QUICKSAND - VERY POOR	ROCK, POOR 10,000 LBS/FT²
6"									
11 1/4°	1,108	1	1	1	1	1	1	2	1
22 1/2°	2,207	1	2	2	1	1	1	3	1
45°	4,328	2	3	3	1	1	2	5	1
90°	7,996	2	4	5	1	1	2	8	1
PLUG	5,655	2	3	4	1	1	2	6	1
8"									
11 1/4°	1,970	1	1	2	1	1	1	2	1
22 1/2°	3,922	1	2	3	1	1	1	4	1
45°	7,694	2	4	5	1	1	2	8	1
90°	14,215	4	8	9	2	2	4	15	2
PLUG	10,053	3	5	6	2	2	3	10	1
12"									
11 1/4°	4,433	2	3	3	1	1	2	5	1
22 1/2°	8,826	3	5	6	2	2	3	9	1
45°	17,312	5	9	11	3	3	5	18	2
90°	31,983	8	16	19	4	4	8	32	4
PLUG	22,619	6	12	14	3	3	6	23	3
16"									
11 1/4°	7,881	2	4	5	1	1	2	8	1
22 1/2°	15,691	4	8	10	2	2	4	16	2
45°	30,779	8	16	19	4	4	8	31	4
90°	56,861	15	29	35	8	8	15	57	6
PLUG	40,213	10	21	25	5	5	10	41	5

REACTION BEARING AREAS ARE IN SQUARE FEET MEASURED IN A VERTICAL PLANE IN THE TRENCH SIDE AT AN ANGLE OF 90° TO THE THRUST VECTOR.

USE 6" - 90 BEND VALUE FOR HYDRANTS FOR ADDITIONAL SAFETY FACTOR.

THRUST BLOCKING DESIGN QUANTITY TABLE

REVISIONS	DATE	REVISIONS	DATE

REACTION BEARING AREAS FOR HORIZONTAL WATER PIPE BENDS BASED ON TEST PRESSURE OF 200 P.S.I. (ALL AREAS GIVEN IN SQUARE FEET.)									
SIZE AND DEGREE OF BEND	STATIC THRUST IN POUNDS	MODERATELY DRY CLAY 4000 LBS/FT²	SOFT CLAY 2000 LBS/FT²	GRAVEL, COARSE SAND 1600 LBS/FT²	8000 LBS/FT² DRY CLAY - ALWAYS DRY	SAND, COMPACT FIRM 8000 LBS/FT²	SAND, CLEAN DRY 4000 LBS/FT²	SOIL 1000 LBS/FT² QUICKSAND - VERY POOR	ROCK, POOR 10,000 LBS/FT²
24"									
11 1/4°	17,734	5	9	11	3	3	5	18	2
22 1/2°	35,305	9	18	22	5	5	9	36	4
45°	69,252	18	35	42	9	9	18	70	7
90°	127,936	32	64	77	16	16	32	128	13
PLUG	90,478	23	46	55	12	12	23	91	10
30"									
11 1/4°	27,709	7	14	17	4	4	7	2	3
22 1/2°	55,163	14	28	34	7	7	14	56	6
45°	108,206	28	55	65	14	14	28	109	11
90°	199,900	50	100	120	25	25	50	200	20
PLUG	141,372	36	71	85	18	18	36	142	15
36"									
11 1/4°	39,901	10	20	24	5	5	10	40	4
22 1/2°	79,439	20	40	48	10	10	20	30	8
45°	155,816	39	78	94	20	20	39	156	16
90°	287,855	72	144	172	36	36	72	288	29
PLUG	203,575	51	102	122	26	26	51	204	21
48"									
11 1/4°	70,935	18	36	43	9	9	18	71	8
22 1/2°	141,218	36	71	85	18	18	36	142	15
45°	277,007	70	139	166	35	35	70	277	28
90°	511,742	128	256	320	64	64	128	512	52
PLUG	361,911	91	181	217	46	46	91	362	37

REACTION BEARING AREAS ARE IN SQUARE FEET MEASURED IN A VERTICAL PLANE IN THE TRENCH SIDE AT AN ANGLE OF 90° TO THE THRUST VECTOR.

USE 6" - 90 BEND VALUE FOR HYDRANTS FOR ADDITIONAL SAFETY FACTOR.

THRUST BLOCKING DESIGN QUANTITY TABLE

REVISIONS	DATE	REVISIONS	DATE

Prepared by

VHB Engineering NC, P.C. (C-3705)
940 Main Campus Drive, Suite 500
Raleigh, NC 27606

PROJECT REFERENCE NO.	SHEET NO.
BPI-R009	UC-4

UTILITIES ENGINEER

NORTH CAROLINA PROFESSIONAL SEAL 14101 ENGINEER JOHN M. KAMPRATH
DocuSigned by: 5/24/2023 | 9:22:56 AM EDT
5/24/2023

DOCUMENT NOT CONSIDERED FINAL UNLESS ALL SIGNATURES COMPLETED

5/24/2023
BPI-R009_utl_details.dgn
USERdhill