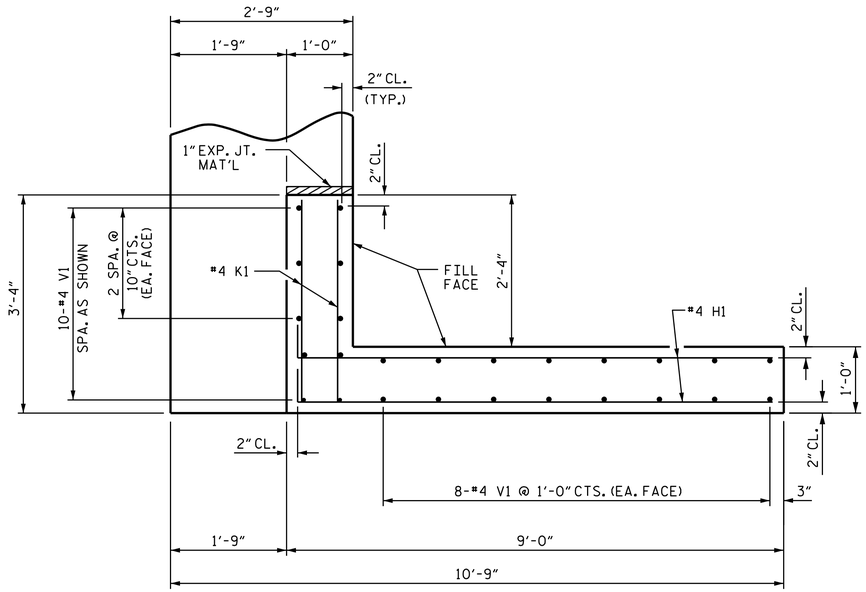

PLAN OF WING (W1)

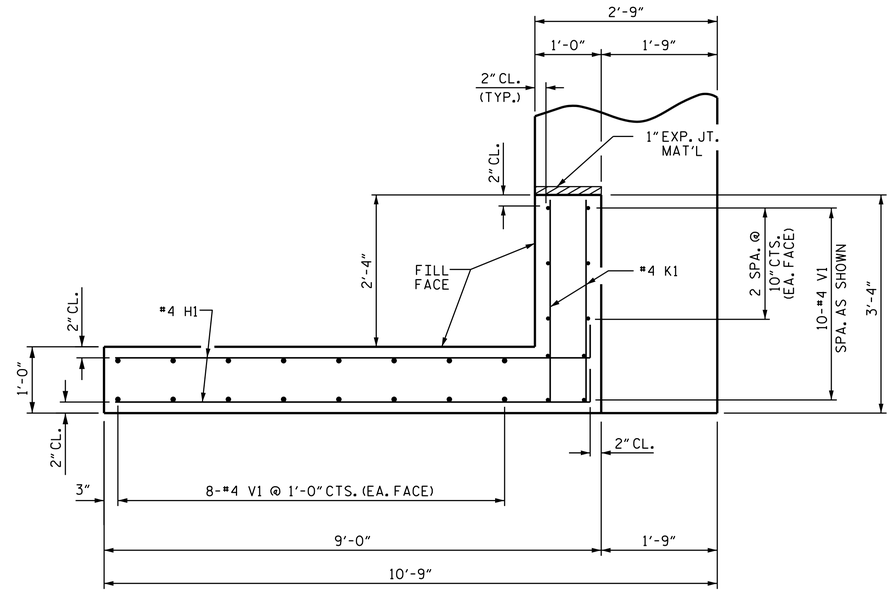

PLAN OF WING (W2)

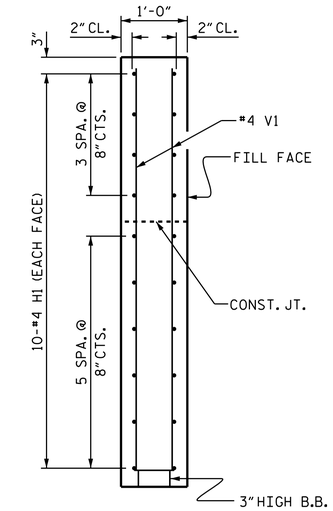

SECTION X-X

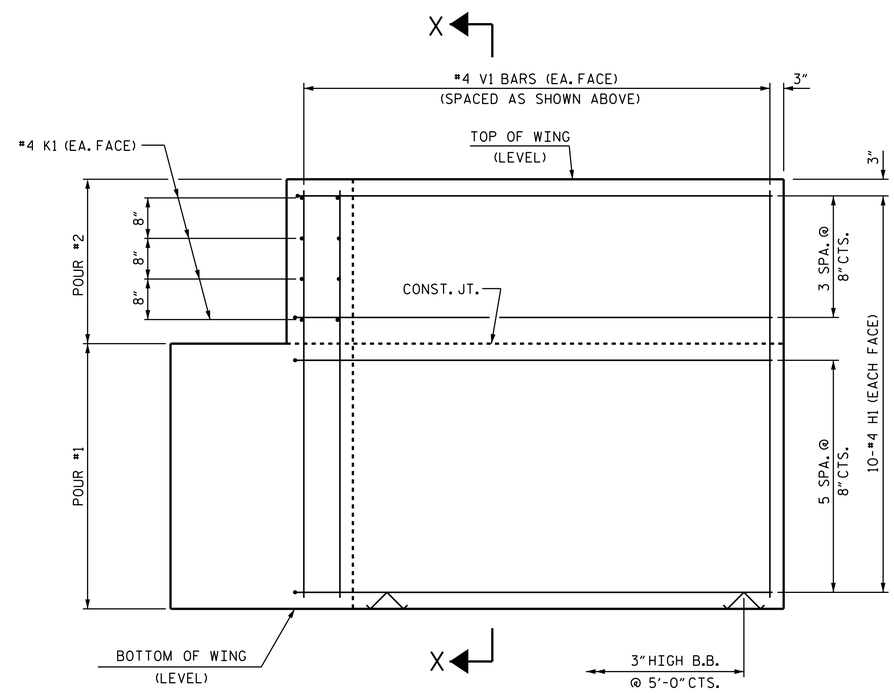

ELEVATION OF WING (W1)

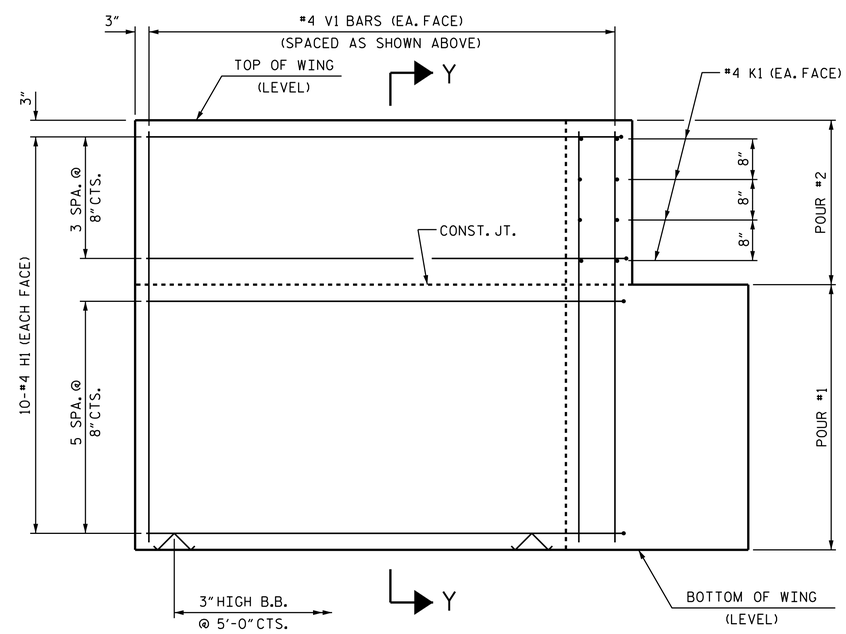

ELEVATION OF WING (W2)

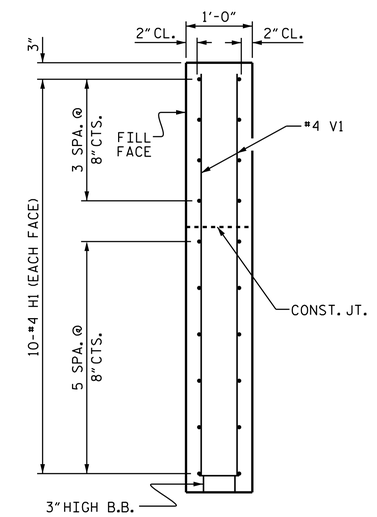

SECTION Y-Y

WING DETAILS

PROJECT NO. BP1-R009

NORTHAMPTON COUNTY

STATION: 14+14.50 -L-

SHEET 3 OF 4

VHB Engineering NC, P.C. (C-3705)
940 Main Campus Drive, Suite 500
Raleigh, NC 27606

DRAWN BY : D.E. MORRISSETTE DATE : 04/2023
CHECKED BY : E.C. PHELPS DATE : 04/2023
DESIGN ENGINEER OF RECORD: E.C. PHELPS DATE : 05/2023

9/1/2023
\\vhb.com\gbl\proj\Raleigh\38973.01 NCDOT_Div1_Bridge 18\NCDOT\Structures\Drawings\400_010_BP1-R009_SMU_EB03.dgn
dmorrissette

NORTH CAROLINA PROFESSIONAL SEAL 048992 ENGINEER ELIZABETH C. PHELPS
DocuSigned by: Elizabeth Phelps A3045984A0627455... 9/1/2023

DOCUMENT NOT CONSIDERED FINAL UNLESS ALL SIGNATURES COMPLETED

STATE OF NORTH CAROLINA
DEPARTMENT OF TRANSPORTATION
RALEIGH

SUBSTRUCTURE

END BENT
WING DETAILS

REVISIONS						SHEET NO.
NO.	BY:	DATE:	NO.	BY:	DATE:	S-11
1			3			TOTAL SHEETS
2			4			14

STD.NO.EB_30_90S4