PROJECT REFERENCE NO.	SHEET NO.
BP1.R009 (SF-650018)	2G-1

GEOTECHNICAL ENGINEER

NORTH CAROLINA PROFESSIONAL SEAL 032171 ENGINEER JINYOUNG PARK

DocuSigned by: A71DB5C8B9B4... 04/20/2023

SIGNATURE DATE

ENGINEER

SIGNATURE DATE

DOCUMENT NOT CONSIDERED FINAL UNLESS ALL SIGNATURES COMPLETED

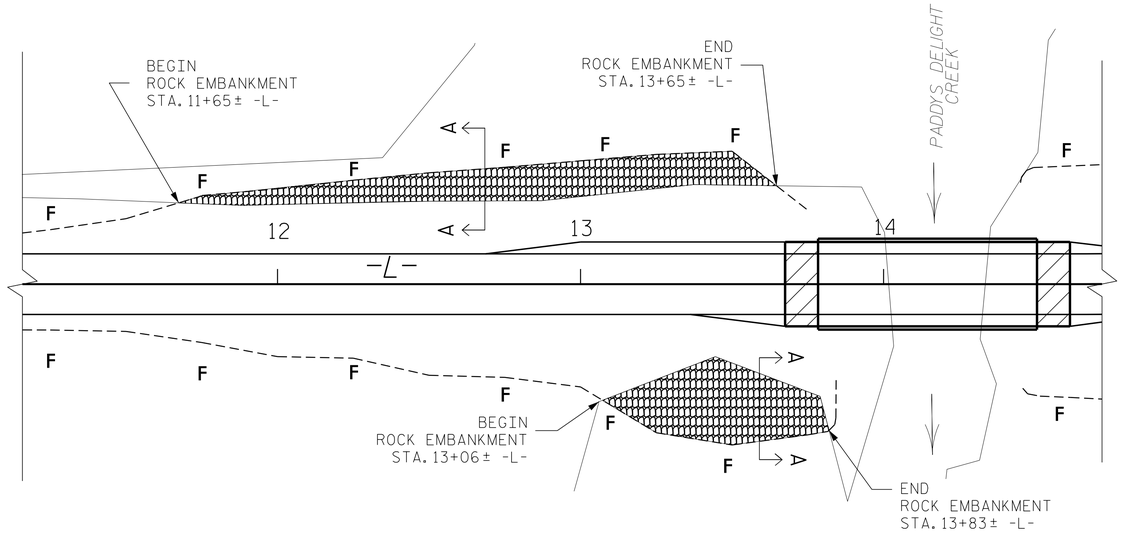

PLAN VIEW

NOT TO SCALE

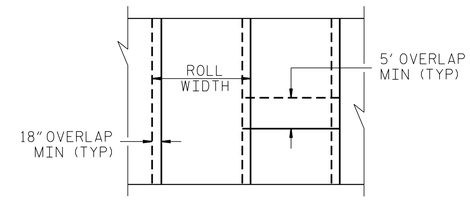

GEOTEXTILE OVERLAP DETAIL

(PLAN VIEW)

ESTIMATED QUANTITIES	
RIP RAP, CLASS 2	500 TONS
RIP RAP, CLASS A	120 TONS
#57 STONE (SELECT MATERIAL, CLASS VI)	120 TONS
GEOTEXTILE FOR ROCK EMBANKMENTS	230 SY

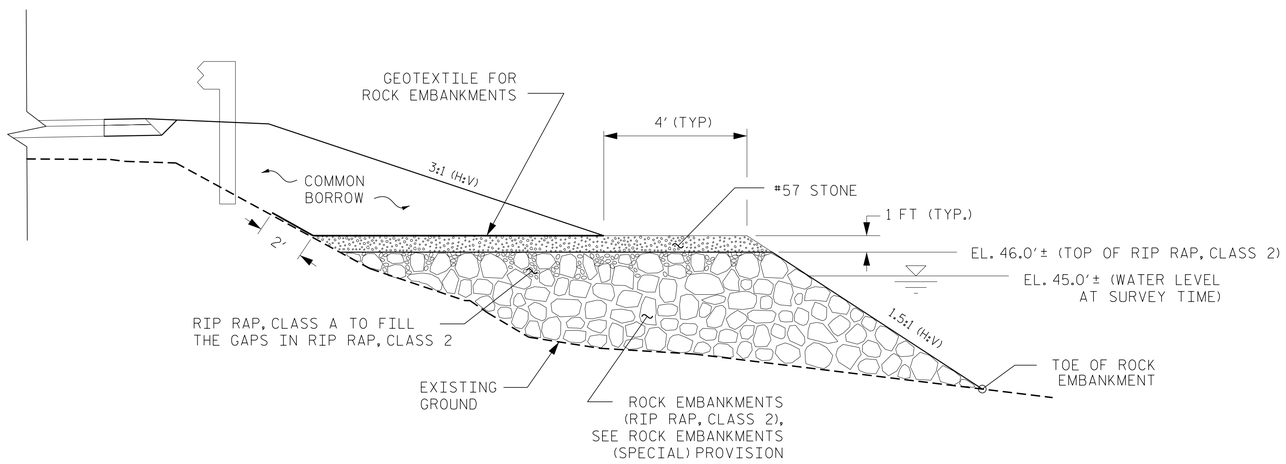

ROCK EMBANKMENT TYPICAL SECTION A-A

NOT TO SCALE

NOTES

FOR ROCK EMBANKMENTS, SEE ROCK EMBANKMENTS (SPECIAL) PROVISION.

INSTALL ROCK EMBANKMENTS USING RIP RAP, CLASS 2 AS SHOWN IN THE PLAN.

FILL VOIDS IN THE TOP OF ROCK EMBANKMENTS WITH RIP RAP, CLASS A.

PLACE #57 STONE (SELECT MATERIAL, CLASS VI) 1 FT. ABOVE RIP RAP, CLASS 2 AS SHOWN IN THE PLAN.

INSTALL GEOTEXTILE FOR ROCK EMBANKMENT BETWEEN #57 STONE AND COMMON BORROW MATERIAL.

THE ROLL DIRECTION OF GEOTEXTILE FOR ROCK EMBENKMENT CAN BE EITHER PARALLEL OR PERPENDICULAR TO THE -L- ALIGNMENT.

PREPARED BY: J. PARK	DATE: 04 / 2023
REVIEWED BY:	DATE:

STATE OF NORTH CAROLINA DEPARTMENT OF TRANSPORTATION

NORTH CAROLINA
DEPARTMENT OF TRANSPORTATION
DIVISION OF HIGHWAYS

GEOTECHNICAL ENGINEERING UNIT

ROCK EMBANKMENT DETAILS

REVISIONS

NO.	BY	DATE	NO.	BY	DATE
1	–	–	3		
2			4		